Microwave Quenchable Oscillators- A New Class*

A. P. S. Khanna, R. T. Oyafuso, R. Soohoo & J. Huynh

AVANTEK INC.
3175 Bowers Avenue
Santa Clara, CA. 95054

Abstract:
A new class of fast-switching oscillators is presented, in which the oscillations are switched on and off without affecting the device bias conditions by quenching the negative resistance with a PIN diode. The quenching technique, applicable to all types of oscillators, makes possible the realization of fast-switching, fast-settling, spurious-free wideband multi-oscillator assemblies. The speed of operation is demonstrated by a Ku-band VCO which settles within 1 MHz of its final frequency and a Ku-band DRO which settles within 100 kHz of its final frequency within 1 μs after the output is switched on using the PIN-diode quenching technique. The same PIN-diode control can be used in a "partial quenching" mode for control of output power level, and for harmonic reduction.

Introduction:
In a multi-oscillator subassembly, such as the one shown in figure 1, it is often necessary to activate one oscillator at a time, with feedthrough levels from unselected oscillators held to very low values— often to less than –100 dBc. Even expensive switch banks are not able to provide that kind of isolation over wide operating bandwidths. Turning off the bias supply to the unused oscillators eliminates the spurious signals, but the resulting switching/settling time is of the order of milliseconds compared to less than 1 microsecond using the new quenching techniques. Fast-switching DROs can be used in direct synthesis applications as well as in applications such as fast-switching LOs in modern EW systems.

This paper marks the emergence of a category of oscillators which we refer to as the Microwave Quenchable Oscillator (MQO) which can be turned on and off at submicrosecond rates with no spurious signals generated when the oscillator is off. This is made possible through the use of a PIN diode on one of the transistor terminals. Controlling the current through the diode makes it possible to turn the output of the oscillator on or off without changing the bias applied to the oscillating device[1].

Figure 2 represents the basic configuration of a MQO. A three-terminal device is used with the terminals 1, 2 and 3 connected to the resonant circuit, the output load circuit and to the feedback and quenching circuits

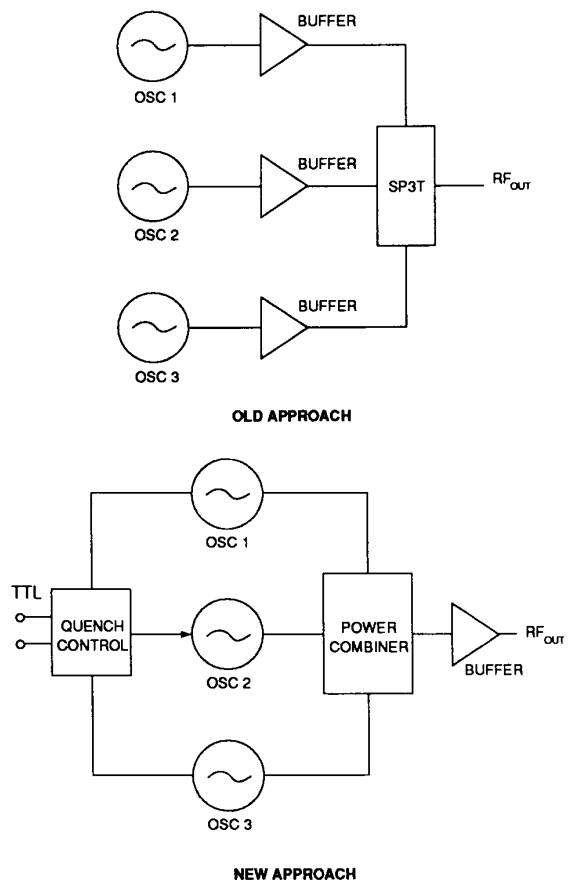

Figure 1 - Multi-Oscillator Assembly

* U.S. Patent 4,755,772 dated July 5, 1988.

CH2725-0/89/0000-0515$01.00 © 1989 IEEE

respectively. The quenching circuit includes a PIN diode that is coupled to the transistor at the same port as the reactive feedback and the means for selectively applying a bias voltage to the diode (quenching driver).

The quenching circuit selectively diverts a fraction of the current flowing through the oscillator transistor to control the PIN diode resistance and, hence, the output power of the oscillator.

Theory:
Figure 3 represents an Avantek SS220 silicon bipolar transistor with capacitive series feedback in the emitter to create the necessary instability in the device (S11 > 1) over a frequency band of 7 to 17 GHz. If the quenching circuit, consisting of a beam-lead PIN diode

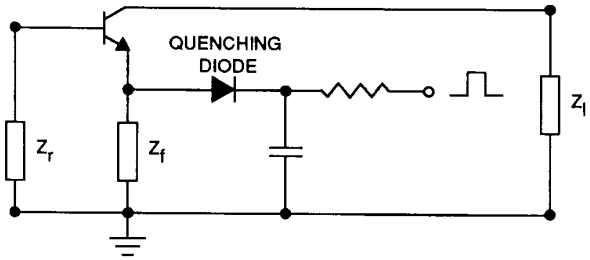

Figure 2 - Microwave Quenchable Oscillator Circuit Configuration

is now added, the S11 magnitude (which is related to negative resistance) can be controlled by varying the quenching current through the PIN diode. Fig. 3 also represents the effect of quenching current on the magnitude of reflection coefficient S11. Notice that with a quenching current of 0.5 ma or more, which corresponds to an equivalent resistance of 50 ohms or less, the magnitude of S11 falls below 1 indicating the absence of negative resistance. The quenching current thus can be used to control the degree of oscillator non-linearity and hence the power output of the oscillator from no output to maximum output.

Design:
Quenchable VCO:
Figure 4a shows a Ku-band quenchable VCO using an Avantek silicon bipolar transistor and a silicon abrupt varactor. The quenching diode is a beam-lead PIN diode with low reverse bias capacitance.

The oscillator circuit uses series capacitive feedback at the device emitter port, with output taken from the device collector. The quenching circuit is connected at the emitter, and the tuning circuit containing the silicon varactor is connected at the base.

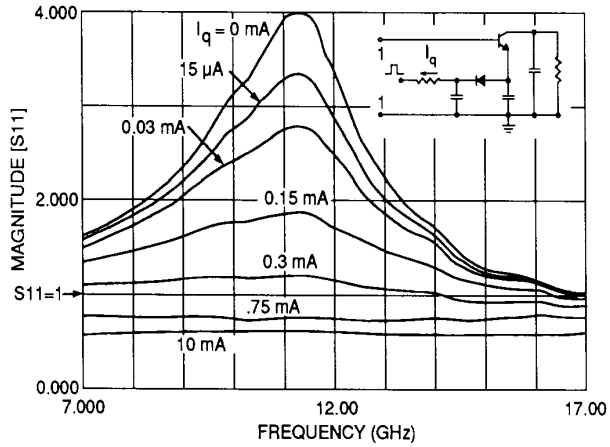

Figure 3 - S11 Magnitude (Negative Resistance) as a function of quenching current.

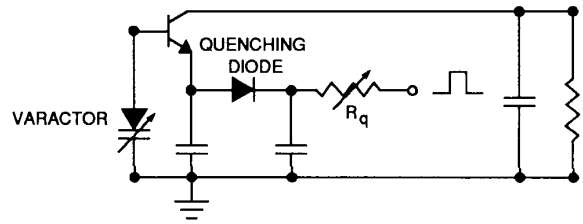

Figure 4a - Microwave Quenchable VCO Circuit

Oscillator circuits were designed & optimized for oscillations over 7 to 10, 10 to 12.5 and 12.5 to 15 GHz frequency bands, with the quenching diode reverse-biased. The circuit is then modeled with the quenching diode under desired forward-biased condition to confirm that the oscillation conditions are not satisfied at any frequency.

Quenchable DRO:
Figure 4b shows a quenchable DRO using the same device as the previously-discussed VCO. The unloaded quality factor of the dielectric resonator coupled to a shielded microstrip line was measured to be 2100 at 12 GHz.

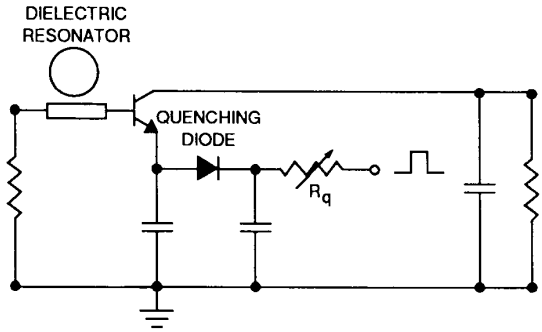

Figure 4b- Microwave Quenchable DRO Circuit

A collector-output circuit configuration is used, with both the series feedback network and the quenching circuit on the emitter. The feedback circuit is designed for the required negative resistance at the required frequency, and the position of the dielectric resonator on the base is calculated using computer-aided design techniques to meet the oscillation conditions at the desired frequency with the quenching diode reverse biased. The quenching operation is analyzed by verifying that the oscillation conditions are not satisfied at any frequency once the quenching diode is forward biased with the nominal quenching current range.

Experimental Results:

VCO Assembly:

A multi-oscillator assembly using three quenchable VCOs was designed and fabricated to cover 7 to 15 GHz. Figure 5 is a picture of the assembly, showing a three-way power combiner and RF amplifiers. Figure 6 shows the switching and frequency settling performance of the oscillator assembly going from one band to another, by quenching band 1 and "unquenching" band 3. The switching performance between the bands compared favorably to settling performance within the band, thus making the assembly performance independent of the number of oscillators.

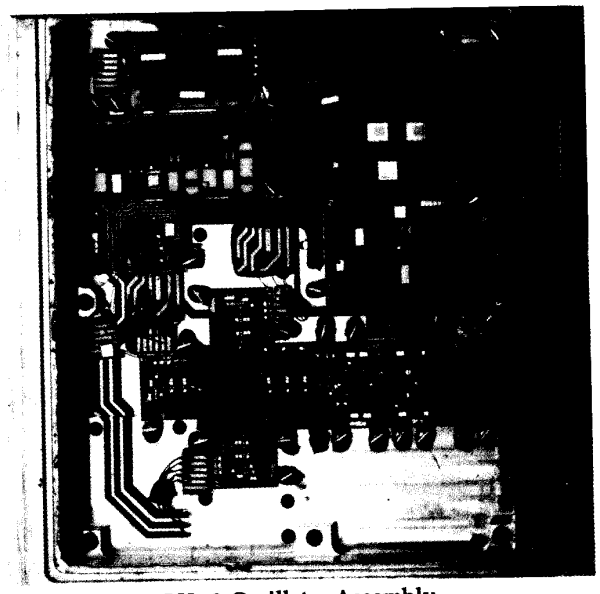

Figure 5 - 7-15 GHz 3-Oscillator Assembly

Spurious at Unselected Frequencies:

The spurious frequency performance of the unselected oscillators was measured. No spurious was observed to the measurement limit of –90 dBm. This aspect is

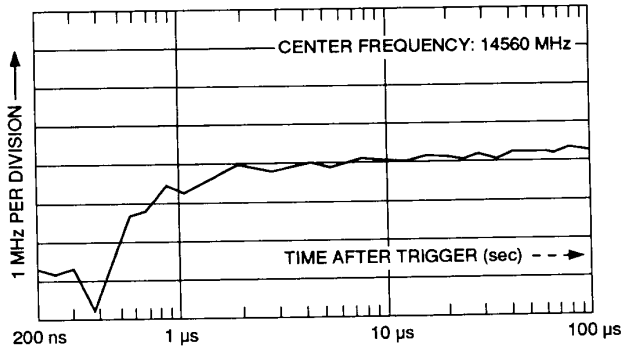

Figure 6 - Ku Band VCO Switching/ Settling Characteristics

of prime importance in wideband multi-oscillator assemblies.

Use of Partial Quenching:

Output Power Control:

The quenching current through the PIN diode can be controlled to vary the degree of nonlinearity and, hence, the operating point of the oscillating device. This provides control over the power output from zero to maximum as a function of the quenching current as shown in fig. 7. The power control can be coupled to an ALC circuit to level the power output over the frequency band, or to vary the oscillator power output

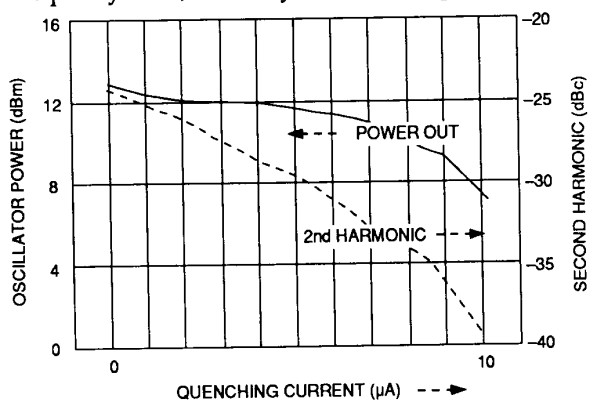

Figure 7 - Power Output Variation as a function of Quenching Current

as required in the subsystem in which the oscillator is used. Amplitude modulation can be achieved by using the modulation signal to control the quenching current.

Harmonics:

Partial quenching can be used to reduce the harmonic generation of an oscillator by controlling the degree ofnon-linearity. For less than 2 dB variation in power output the harmonics could be improved by more than 10 dB by adjusting the quenching current(fig.8).

DRO Assembly:
Figure 8 shows a quenched three-DRO assembly in X & Ku band. The oscillators are combined using ring combiners designed at the oscillator frequencies. Figure 9 shows the switching and settling time performance of the assembly, switching from oscillator 1 to oscillator 3. The switching time in this case can be easily identified due to the high Q of the resonant circuit. The settling time for the final frequency was measured using a high-sensitivity delay line frequency discriminator. The final frequency settled within ±10 ppm in less than 1 μs.

This quenching technique has a number of advantages over the multi-resonator/single device technique[3]. For one, there is no limit to the number of dielectric resonator oscillators—and therefore no limit to the

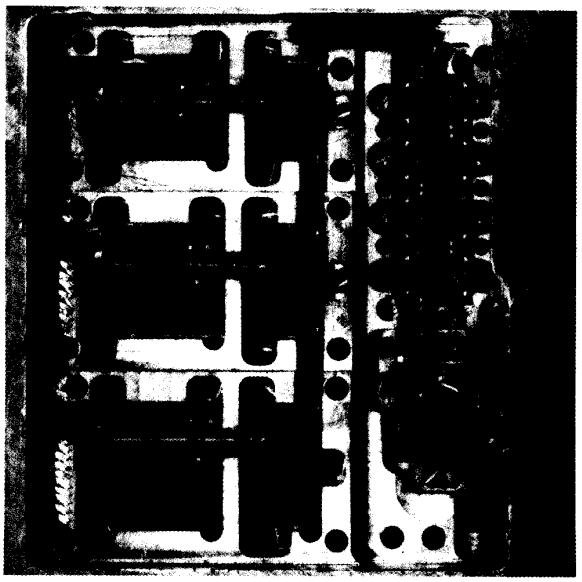

Figure 8 - X/Ku Band DRO Assembly

number of frequencies—in a single assembly. Since each device is now oscillating at only one frequency, the matching circuit, feedback circuit and bias can be optimized for best settling at that frequency. The spurious outputs from the unselected outputs were lower than the measurement limit of –90 dBc.

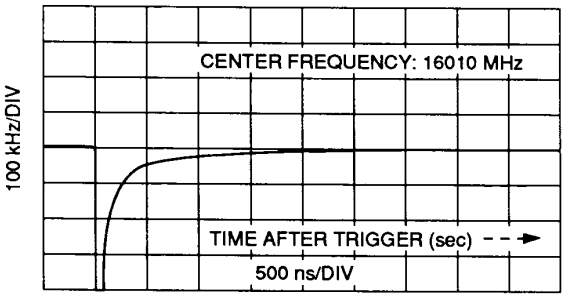

Figure 9 - Ku Band DRO Switching/Setting Time Characteristic

Conclusion:
A new and unique quenching technique has been presented to realize fast switching and settling microwave transistor oscillators. In this technique a PIN diode is used to quench and unquench the negative resistance to switch the oscillations off and on without affecting the device bias. Partial quenching can be used to control the oscillator operating point and hence control the power output, harmonics and spurious performance.

Acknowledgements:
The authors are grateful to Jose Buenrostro for his craftmanship in the fabrication and testing of the oscillators. Thanks are due to Doug MacLeod & John Coward for their help in making settling time measurements.

References:
[1] A. P. S. Khanna, "Switchable Microwave Oscillators", U.S.Patent # 4,755,772 dated July 5, 1988.

[2] A. P. S. Khanna, "Fast Settling Low Noise Ku-band Fundamental Bipolar VCO", IEEE Int. Microwave Symp. Digest, 1987, pp. 579-581.

[3] A. P. S. Khanna & R. Soohoo, "Fast Switching X & Ku Band Multi Frequency Dielectric Resonator Oscillator Using a Single GaAs FET", IEEE Int. Microwave Symposium Digest, 1987, pp.189-191