A Film Bulk Acoustic Resonator (FBAR) L Band Low Noise Oscillator for Digital Communications

A.P.S. Khanna, Ed Gane, Thomas Chong, Herb Ko*, Paul Bradley, Richard Ruby and John D.Larson III*
Wireless Semiconductor Division, Agilent Technologies, Inc.
3175 Bowers Avenue, Santa Clara, CA. 95054
*Agilent Laboratories, 3500 Deer Creek Road, Palo Alto, CA. 94304

Abstract — This paper describes the design and measured performance of a low-noise L band oscillator based on Agilent's Film Bulk Acoustic Resonator (FBAR) for applications in digital communication systems. This experimental oscillator demonstrated at 1951 MHz with a phase noise of –115 dBc/Hz at 10KHz from the carrier represents the first example of a low noise Si-Bipolar FBAR oscillator.

INTRODUCTION

An oscillator is a key element of any communication system. A number of demanding applications in wireless and wireline communication systems require low phase noise small-size oscillators in the frequency range of 600 MHz to 3 GHz. Significant benefits can be realized by using micro-machining techniques and new materials in the design and fabrication of these devices. FBAR resonator technology is now available for use in this frequency range. Alternate resonators include ceramic resonators, surface acoustic wave (SAW) resonators and planar lumped - element and transmission line resonators. Ceramic resonators are bulky in size compared to SAW resonators but offer better phase noise. Planar lumped element oscillators provide mediocre phase noise performance but represent small size. Transmission line resonator oscillators require larger real estate and offer medium phase noise performance. An FBAR oscillator offers smaller size and competitive phase noise compared to a SAW oscillator. FBAR oscillators, therefore, provide small size, high performance, and low cost simultaneously. The oscillator presented in this paper, to our knowledge, represents the very first low - noise Silicon Bipolar FBAR oscillator in this frequency range.

FBAR DEVICE

The Agilent FBAR is a three-layer structure with the top and bottom electrodes of molybdenum sandwiching a middle layer of oriented piezoelectric aluminum nitride. An air interface is used on both outer surfaces to provide high Q reflectors at all frequencies [1]. When RF signals are applied near the mechanical resonant frequency the piezoelectric transducer excites the fundamental bulk compression wave traveling perpendicular to the films.
A picture of an FBAR is shown in Fig. 1

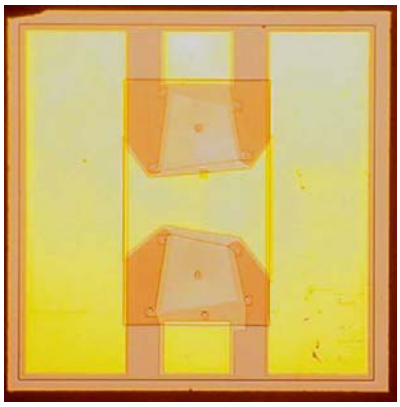

Fig. 1 FBAR Chip 40 x 40 x 5 mils

As seen through the electrical terminals, the FBAR has an equivalent circuit model as shown in Fig. 2.
An FBAR far from the resonant frequencies behaves like the plate capacitance Co in series with the two resistors Ro and Rs. This resonator has a series resonant frequency and a parallel resonant frequency, which are typically 1-3% apart in frequency.

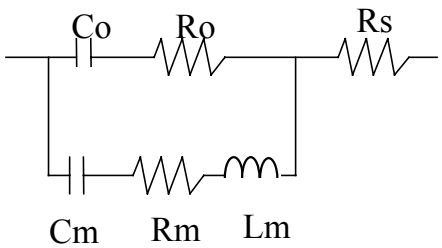

Fig. 2 The equivalent circuit model for FBAR

The Quality factor of the FBAR chip resonator was measured using |S21| in a band-stop configuration. The Unloaded Quality factor, Qu, was measured to be better than 500 for the series resonant frequency mode. FBAR devices are excellent choice for small size, low cost filter and duplexer applications [2][3][4] in addition to oscillators.

THE OSCILLATOR DESIGN

This FBAR Oscillator uses Agilent Technologies silicon Bipolar device S420 as an active device. This device has 20 emitter fingers with emitter pitch of 4 micrometers. Chip size is 13 mils x 13 mils. Resonator is used as a frequency-determining element in the emitter terminal. Negative resistance is created by using the appropriate immitance on the base terminal. Output power is coupled from the collector terminal. Phase shift between the active device and resonator, used as a series feedback element, is optimized to meet the oscillation conditions as well as provide conditions for minimum phase noise in the oscillator. Fig. 3 shows the linear simulation model using Agilent ADS Software in order to determine the necessary base inductance to create |S11| >1 (negative resistance) in the desired frequency range.

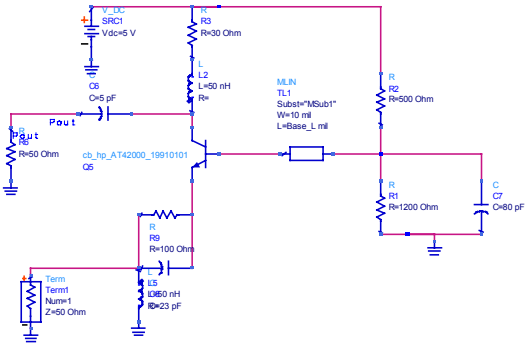

Fig. 3 Linear simulation using ADS

Figure 4 shows magnitude of S11 as a function of transmission line length at the base of the bipolar transistor. The simulation shows that a line length of 250 to 350 mils provides necessary negative resistance at the emitter terminal.

Figure 5 shows the non-linear simulation of the FBAR oscillator circuit using harmonic balance. The FBAR resonator is connected to the emitter terminal and oscillation conditions are satisfied by adjusting the phase shift between the emitter terminal and the FBAR using series and parallel inductors.

Results of the simulation using five harmonics are shown in Fig. 6. Power output of about 0 dBm is predicted under the biasing conditions. Power is lightly coupled from the collector terminal.

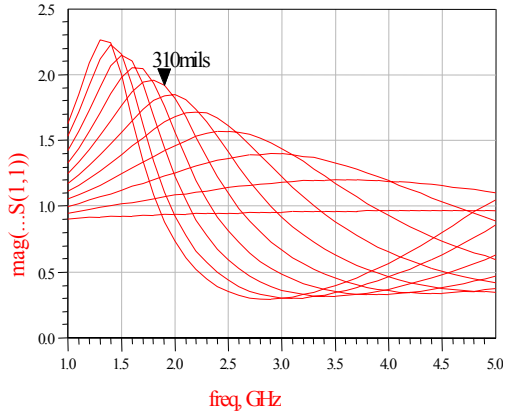

Fig. 4 Linear Simulation Result using ADS

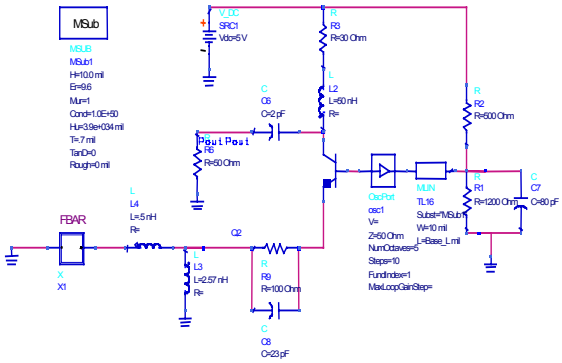

Fig. 5 Non-linear Simulation using ADS

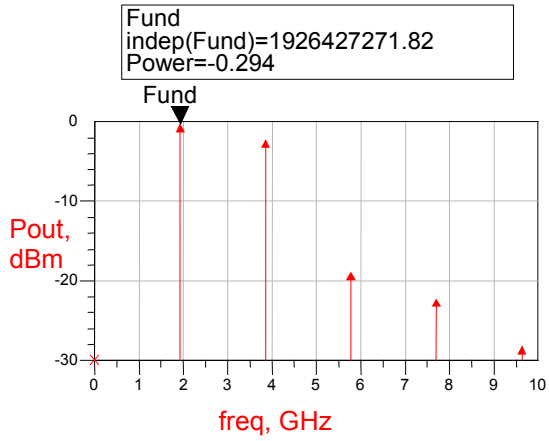

Fig. 6 Results of harmonic balance simulation

The FBAR oscillator was fabricated on a 15-mil thick alumina substrate of 250 mil x 250 mil using thin-film chip-and-wire technology. Components were attached using standard eutectic attach or epoxy attach. The

FBAR resonator was bonded to the transmission lines using 1 mil bond wires. The alumina substrate was attached to an industry standard TO-8 header for testing. A transistor amplifier stage was added to increase the power output and isolate the oscillator from load variations.

MEASUREMENTS

The FBAR oscillator was measured for its performance using standard techniques. Key measured parameters are as follows:

Frequency:	1951 MHz
Power Out:	10 dBm
Frequency Pushing:	25 KHz/V
Frequency Pulling (12dBr):	15 KHz
Second Harmonic:	-40 dBc
Phase Noise:	-115 dBc/Hz @10KHz
Bias:	5V, 35 mA

Center frequency of the oscillator was measured to be within 1% of the simulated result. This error can be attributed to the effects of parasitics and resonator model inaccuracy. Figure 7 represents phase noise plot of FBAR oscillator at 1.951 GHz. Phase noise of –115 dBc/Hz at 10KHz offset from the carrier represents an excellent phase noise performance given the small size of the resonator.

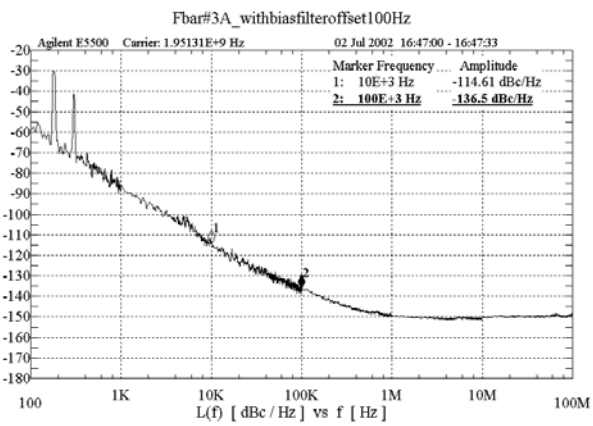

Fig. 7 Phase noise plot of FBAR oscillator

Figure 8 compares phase noise performance of this FBAR oscillator with other oscillators in the frequency range. Three plots are shown: L-C oscillator, SAW oscillator and the FBAR oscillator.

The L-C oscillator for comparison is a 2GHz oscillator using same silicon bipolar device. The SAW oscillator phase noise however is based on a commercially available, small size, SAW oscillator at 622 MHz with the phase noise scaled to 2GHz using standard 20 log (f2/f1) conversion factor. It can be seen that the FBAR oscillator has competitive phase noise compared with the SAW oscillator from 100 Hz up to 100KHz and has superior phase noise at offsets greater than 100 KHz. The FBAR oscillator also offers 15 to 20 dB phase noise improvement with respect to an L-C oscillator.

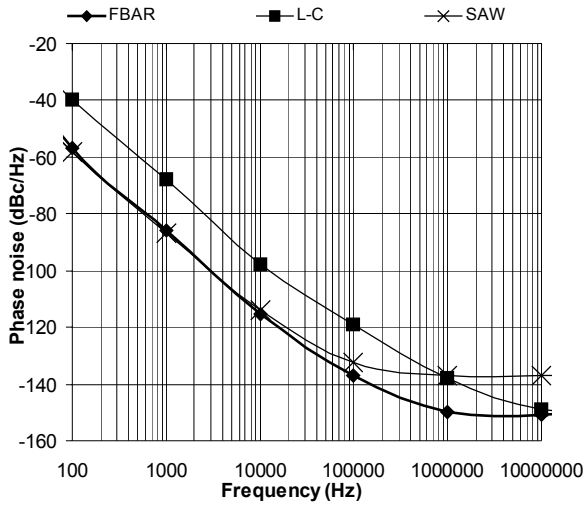

Fig. 8 Phase noise comparison for different oscillators

CONCLUSION

Oscillators using FBAR resonators are very promising new type of oscillators with potentially wide applications in wireline and wireless communications. The oscillator presented in this paper shows excellent phase noise performance, small size, and low cost compared to competitive technologies.

REFERENCES

[1] R. Ruby, J. D. Larson, P. Bradley, and Y. Oshmyansky, "Ultra-Miniature, High-Q Filters and Duplexers using FBAR Technology,"I*SSC* Feb 2001.

[2] K. M. Lakin, G. R. Kline, and K. T. McCarron, Miniature Filters for Wireless Applications," IEEE *MTT-S Digest,* 1995, pp. 883-886.

[3] R. C. Ruby, P. Merchant, "Micromachined Thin Film Bulk Resonators," Proc. *IEEE 48th Symposium on Frequency Control,* 1994, pp. 135-138.

[4] P.Bradley et al., "A Film Bulk Acoustic Resonator (FBAR) Duplexer for USPCS Handset Applications", Proc. IEEE MTT- Symposium 2001, pp. 367-370